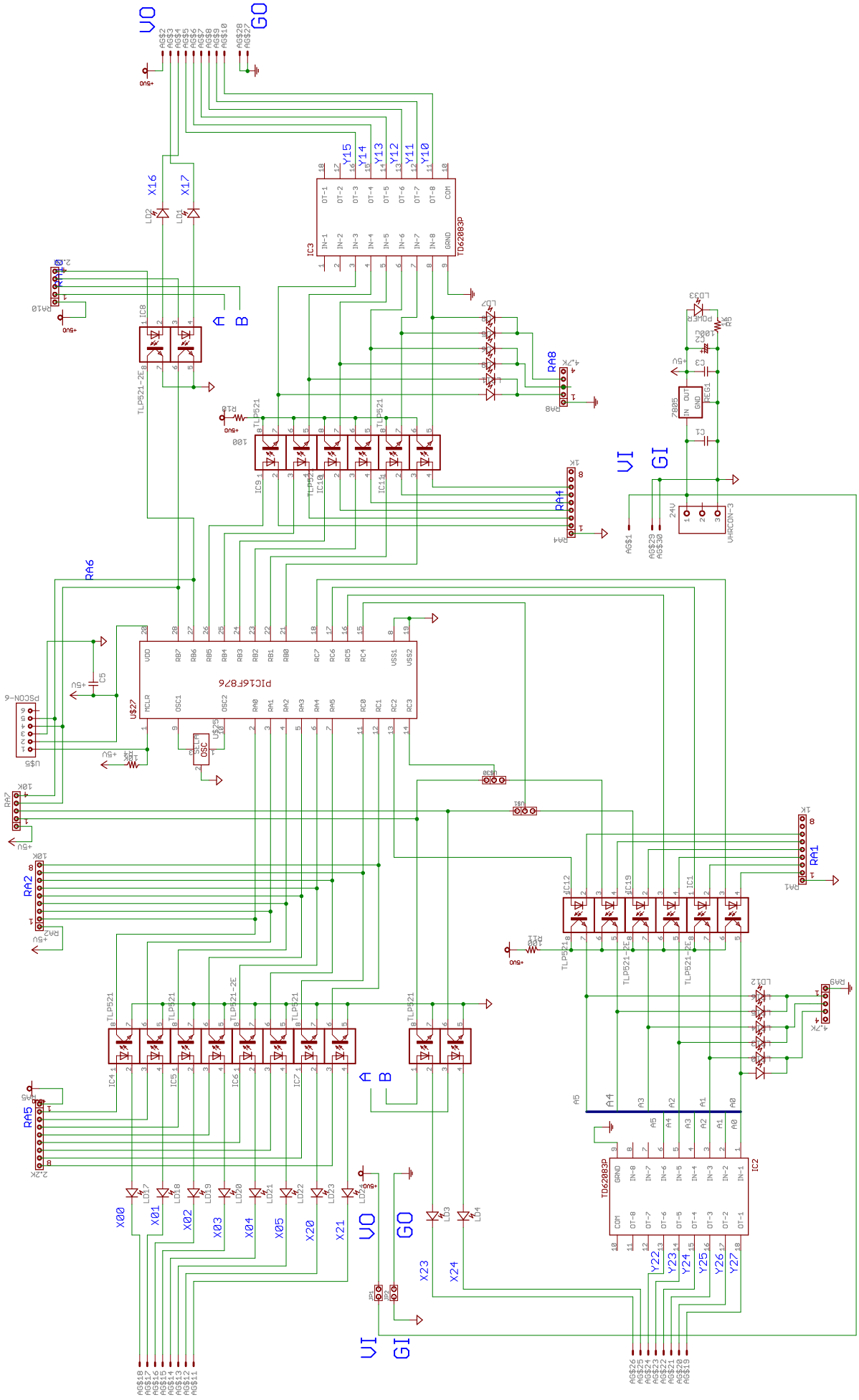

2013/12/10 12:14:31 f=0.56 D:\Eagle\MyProject\SEQ_28IC\876C_I12O10\SEQ_I28C_I12O10.sch (Sheet: 1/1)