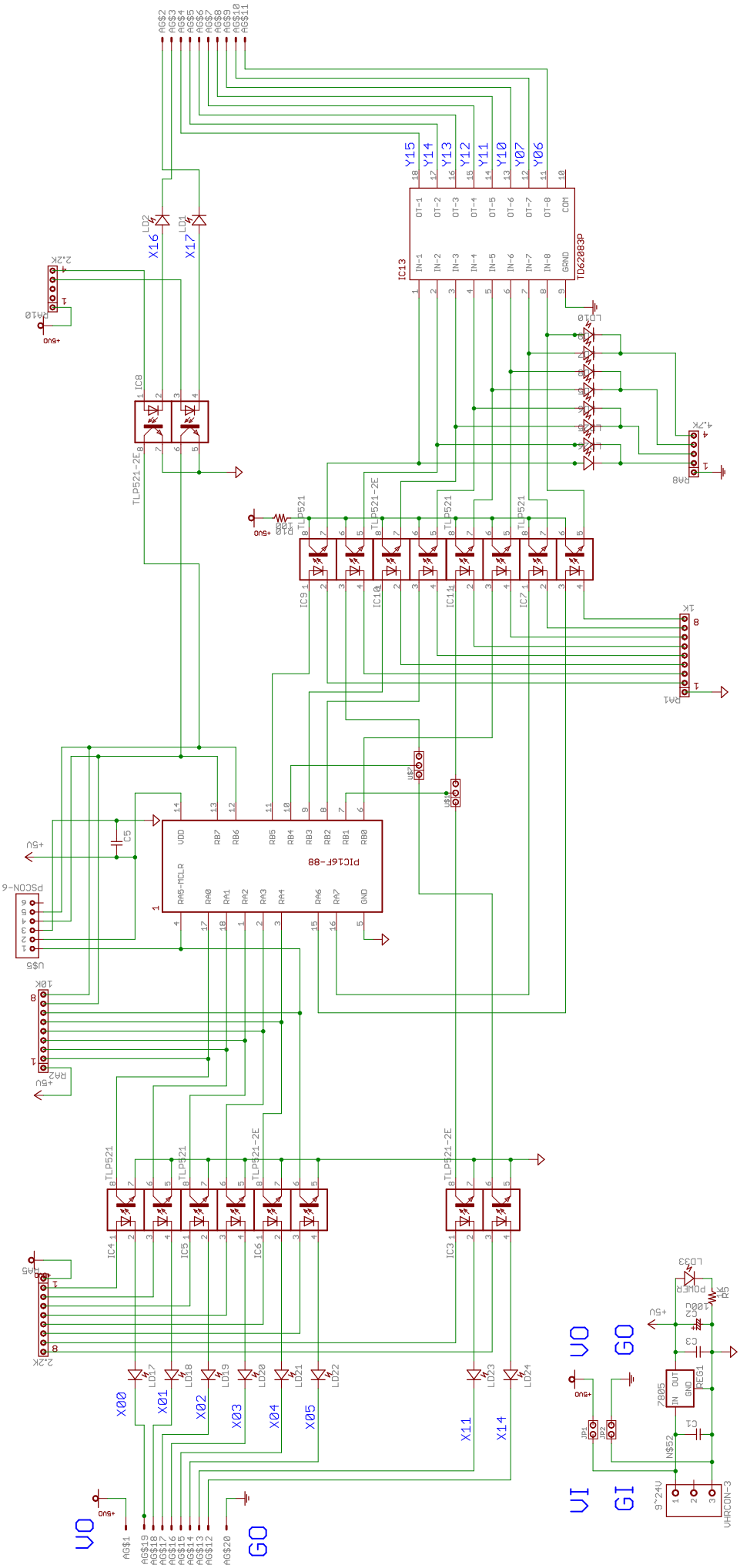

2012/08/14 13:36:44 f=0.62 D:\Eagle\MyProject\SEQ_18IC\88C_I10O6\SEQ_I18C_I10O6.sch (Sheet: 1/1)