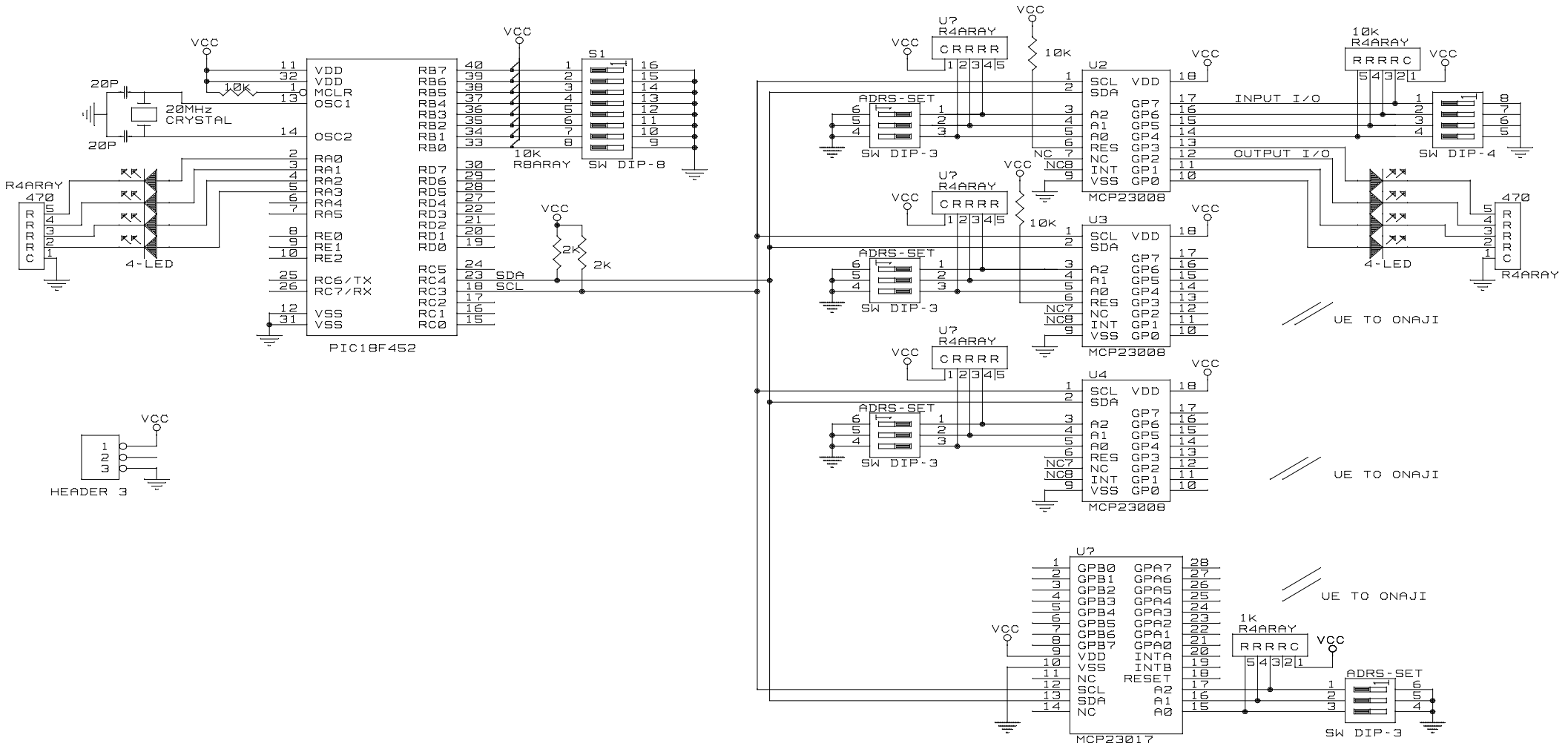

EXPANDER PIC16F877(18f452)-MCP23008-MCP23017

Size	Document Number
B	EXPANDER
Date: December 15, 201	